Mobile Fidelity_Specifications

Mobile Fidelity_Specifications

Worldwide, golden-eared critics have established the fact that Dynaudio is arguably the most innovative and technologically advanced high-end manufacturer of fine home audio loudspeakers. Dynaudio also builds some of the most sought after professional recording studio monitors as well. Dynaudio's long-term, multi-million dollar R&D funded, car-acoustics optimized Mobile Fidelity line of 12 volt loudspeakers reflects the same advanced, no compromise approach that has rendered the company's other product offerings as the absolute state of the art.

Dynaudio has a unique advantage over most loudspeaker companies. At Dynaudio, we build speakers; we don´t buy them. To truly build the world´s best loudspeakers, one must be involved in every step of the process. One hundred percent of each and every Dynaudio loudspeaker driver and component is manufactured in-house, to the exacting standards of our legendary Danish engineers.

INSTALLATION TIPS Page 4

SEPARATE COMPONENTS

Tweeter MD 100 Page 6
Tweeter MD 130 Page 8
Tweeter MD 330 D Page 10

Midrange MD 140/2 Page 12

Woofer MW 150 Page 14
Woofer MW 160 Page 16
Woofer MW 160 GT Page 18
Woofer MW 170 Page 20
Woofer MW 180 Page 22
Woofer MW 190 Page 24

Crossover X 250 Page 26
Crossover X 280 Page 26
Crossover X -360 Page 27
Crossover X 360 A Page 27

COMPONENT SYSTEMS

System 220 MKII Page 28
System 240 MKII Page 28
System 240 GT Page 29
System 240 ESOTAR Page 29
System 340 Page 30
System 360 Page 30

GRILLES Page 31

CONTACTS Page 31

installation

When preparing to install any of the Dynaudio Mobile Fidelity component system or separates, there are three main factors that require attention: the mounting location, the physical dimensions and space allowances, and the distance between the complimentary speakers.

It may be possible to install the speakers into factory provided locations. This may be done with little or no modification necessary. If the loudspeakers are to be installed in the car doors, make sure that the power window mechanism will not interfere with speaker mounting and that the window lowers completely. Door speakers may be protected from water by placing or fabricating a drip shield. If the loudspeakers are to be installed in the rear deck, verify that the trunk lid supports are away from the speaker baskets. It is very important that the speakers are mounted to solid, flat and well-damped baffles and that the air space behind the woofers is sealed completely from the vehicle interior. It is recommended that the speakers be mounted to marine-grade plywood or moisture sealed medium density fibreboard (MDF), and that all surrounding metal or vibrating surfaces should be reinforced and damped with quality sound / vibration deadening materials. Also, make certain that metal does not come in contact with the speaker connection terminals.

Kickpanel mounting also works well. Angled door mounting of the woofers and kickpanel or dash / door mounting of the tweeters will yield good results. We recommend extended experimentation and patience, as these speakers are extremely revealing of everything from the recording, to your system's associated electronics and cabling, to your vehicle's acoustic.

Since Dynaudio speakers have unique physical dimensions, they may require some custom installation. Use the included templates to mark the intended mounting locations. Before cutting, check behind the area for any obstructions and make sure there is enough depth for the speaker. Also, verify that there is nothing to obstruct the front of the speaker's cone. Carefully cut out the mounting hole with a jigsaw or circular saw to the exact requirements of the template. Thoroughly remove any metal shavings, burrs and dust. Firmly mount the speaker from the front to the baffle. Make sure that it is mounted flat and that there are no gaps around the sides.

Depending upon your system design, electronics and desired frequency extension of the Dynaudio woofers, certain airspace may be required. Please consult your Authorized Dealer or Dynaudio for enclosure recommendations.

Quality audio cables are recommended. Speaker wiring from the amp to the crossovers should be as short as possible and the lengths should be identical for both left and right channels. The crossovers should be mounted close to the speakers, with short cable runs for the connections. Be sure that the cables cannot be pinched or cut in any way and are protected from intense heat. To avoid any directional distortions or lack of bass reproduction, make sure that throughout the system the speaker cables are connected to the correct positive and negative terminals.

It has been proven that imaging is primarily related to the midrange positioning and placement, while the tweeters add life, ambience and a sense of space to the sound stage. More important, in order for the sound to be totally correct, dynamic and transparent, it is recommended that the tweeter and woofer be mounted close to one another. When installed correctly, the transition from woofer to tweeter should be seamless and the sound should be coming from somewhere in the sound stage, not the speakers themselves. Proper installation is critical for achieving a well balanced, coherent and believable musical experience.

SYSTEM CROSSOVERS

The system passive crossovers are 12dB per octave highpass and 6dB per octave lowpass (and bandpass in our three-way crossovers). They each include three (3) selectable output levels for adjustment of the tweeter and three (3) for the midrange in the three-way networks, while also incorporating phase and impedance correction. Thereby, the amplifier plays into a resistive load which is easier to drive, versus the typical reactive load resulting in

installation

most passive crossover designs.

Dynaudio prefers to use well-designed shallow slope crossovers instead of higher order networks. Since all Dynaudio speakers are bandwidth optimised, best results are achieved with shallow sloped networks. This is a case where simpler is better. The disadvantages encountered in filters with a high slope, particularly regarding difficulty in reproducing transient pulse response without ringing, can be avoided. The net result is a more musical and less coloured sound with a linear phase response.

There are three (3) levels of tweeter output adjustment for each different crossover network (X 250, X 280, X 360, and X 360 A). With this great amount of flexibility, the installer can easily tune the high frequency output to taste without much, if any, need for active equalization. Depending on the placement and positioning of the tweeters relative to the woofers, the crossover options can improve the amplitude and phase response of the system. Never before has any car speaker component system had this much precision and performance from a supplied crossover.

The Dynaudio Mobile Fidelity woofers were designed for excellent on and off-axis performance. The woofer's high frequency extension, near 3500Hz, was intentionally engineered with a calculated steep roll-off, while maintaining excellent phase response. This design greatly improves the transition between woofer and tweeter. Of course, use of the supplied crossover will ensure a more coherent transition between the woofer and the tweeter, provided that they are mounted close to one another and the axis position is similar. Experimentation is recommended, especially if the drivers are more than six inches apart and / or mounted on different axises.

TRUTH IN PERFORMANCE

Dynaudio Mobile Fidelity loudspeakers that are properly installed and broken-in will have no specific sound character other than that of the music. They will definitely reveal the sound character of all upstream components. It is highly recommended that prior auditioning of associated electronics and careful system matching be done.

After becoming accustomed to other loudspeakers that have characteristic sounds, experiencing the neutral and linear, yet dynamic sound of the Dynaudio speakers will be a drastic departure.

The installation of the Dynaudio Mobile Fidelity loudspeakers may seem rather involved in comparison to conventional car audio loudspeakers. This is by design, as Dynaudio is truly dedicated to achieving the ultimate in sound reproduction. Since we've set out to redefine reference car audio speakers, we felt that it was necessary to explain some of the forethought that went into our products and how one could derive the most performance from them. When a product is taken to a more refined level of performance, increased knowledge and understanding is essential.

MD 100

The MD100 is a 28 mm soft dome tweeter designed for high performance 2- or 3-way systems.

The optimized dome geometry and the low mass of the moving parts ensure a very transparent and detailed reproduction of the high frequencies.

The well damped resonance frequency and the cooling capabilities from the ferrofluid in the magnetic gap provide high power handling even with simple crossovers.

- Coated textile dome eliminates any high frequency break-ups
- Powerful neodymium magnet system
- Protective grille
- Open and detailed high frequency reproduction
- Damped cavity beneath the dome
- Ferrofluid adds damping and increases power handling
- Aluminium voice coil wire results in a low moving mass
- Shallow mounting depth
- Strong 6.4 mm terminals

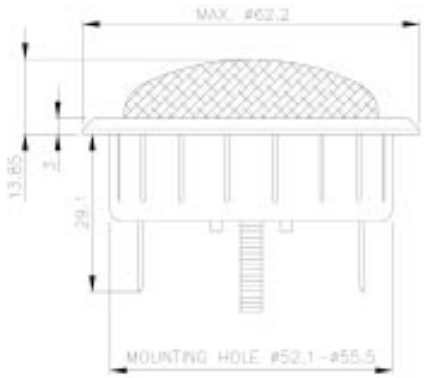

TECHNICAL SPECIFICATIONS

Thiele Small Parameters		
Nominal impedance	Znom	4 Ω
DC resistance	Re	3.2 Ω
Voice coil inductance	Le	0.014 mH
Resonance frequency	fs	1360 Hz
Mechanical Q factor	Qms	1.0
Electrical Q factor	Qes	2.2
Total Q factor	Qts	0.7
Mechanical resistance	Rms	- kg/s
Moving mass (incl. air load)	Mms	0.35 g
Suspension compliance	Cms	- mm/N
Effective dome diameter	d	31.3 mm
Effective piston area	Sd	7.7 cm2
Equivalent volume	Vas	-1
Force factor	Bl	2 Tm
Recommended frequency range	2500-30000 Hz	

Magnet and Voice Coil Properties		
Voice coil diameter	dc	28 mm
Voice coil height	hc	1.7 mm
Voice coil layers	nc	2
Magnetic gap height	hg	2 mm
Linear excursion, peak to peak		- mm
Max. excursion, peak to peak		- mm
Magnet weight	wm	0.02 kg

Power Handling	
Nominal long term IEC*	100 W
Transient (10 ms)	500 W

Mechanical Properties	
Net weight	0.126 kg
Overall dimension	ø62.2x43 mm

* Depending on crossover

MD 100

Frequency response • 2nd and 3rd harmonic distortion

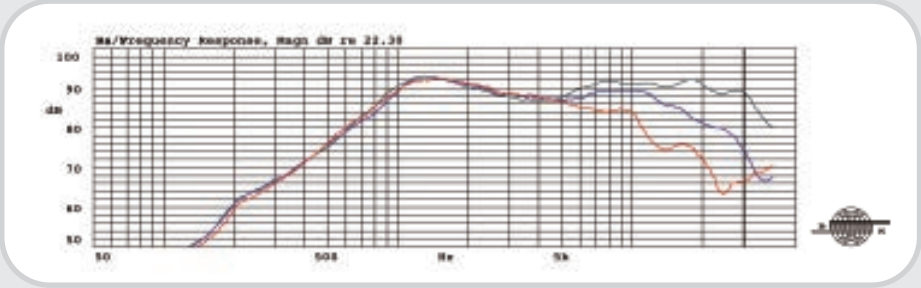

Thick line: on-axis response
Dashed line: 30° horizontal
Thin line: 60° horizontal

Measurement conditions
Level: 2.83 V
Distance: 1 m

Measured in a large baffle

Frequency response • 2nd and 3rd harmonic distortion

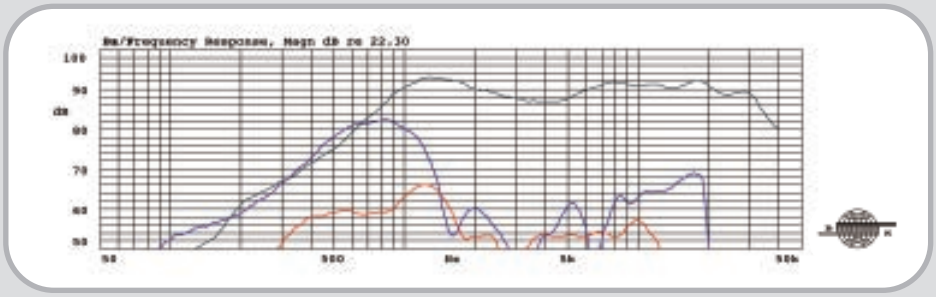

Thick line: on-axis response
Dashed line: 30° horizontal
Thin line: 60° horizontal

Measurement conditions
Level: 2.83 V
Distance: 1 m

Measured in a large baffle

Frequency response • 2nd and 3rd harmonic distortion

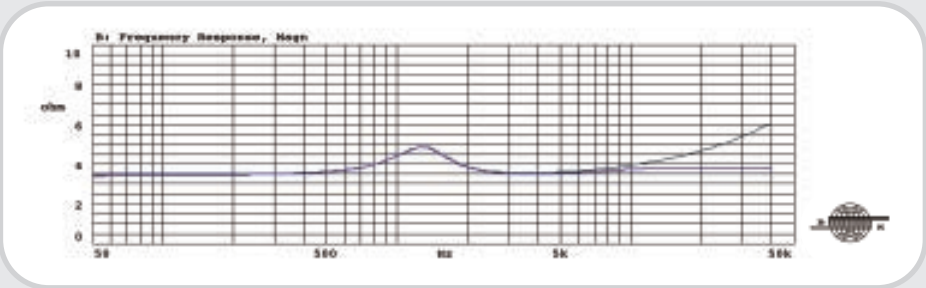

Thick line: on-axis response
Dashed line: 30° horizontal
Thin line: 60° horizontal

Measurement conditions
Level: 2.83 V
Distance: 1 m

Measured in a large baffle

The MD100 has a smooth and wide frequency range extending to beyond 30 kHz. It exhibits excellent dispersion even 60 degrees off-axis, which makes it ideal for use in a car, where the listener in most installations will be off the tweeter-axis.

The distortion is quite low and at frequencies below approximately 2.5 kHz it will be greatly reduced by the crossover.

The impedance curve is extremely linear, making it an easy load for the amplifier.

The driver can be mounted in a wide range of locations, e.g. in the dashboard, the doors or in the hat shelf. The drawing shows a typical second order crossover. The indicated values will make it match the MD140/2.

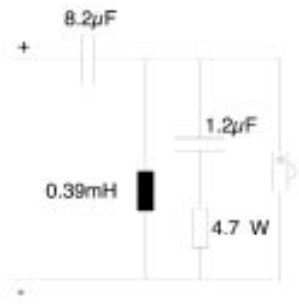

Typical crossover

MD 130

The MD130 is a soft dome tweeter based on the Esotec D-260, but redesigned for usage in a car and similar environment.

The optimized dome geometry and the low moving mass ensure the best possible high frequency reproduction reaching beyond 30 kHz.

The low resonance frequency and the high power handling make the MD130 the ideal choice for both 2- and 3-way systems where the highest quality is desired.

- Coated textile dome eliminates any high frequency break-up
- Protective grille
- Magnet system applying pole piece with conical shaped vent
- Open, spacious, and detailed high frequency reproduction
- Damped cavity beneath the dome
- Ferrofluid adds damping and increases power handling
- Aluminium voice coil wire results in a low moving mass
- Aluminium front plate
- No built-in crossover for higher flexibility

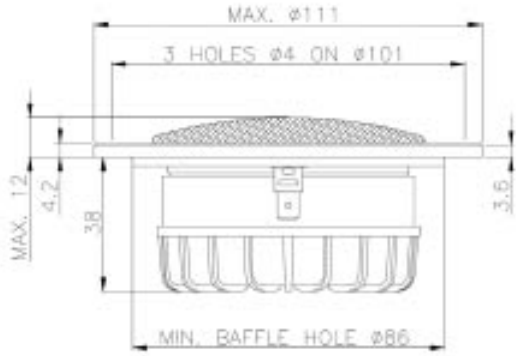

TECHNICAL SPECIFICATIONS

Thiele Small Parameters		
Nominal impedance	Znom	8 Ω
DC resistance	Re	5.1 Ω
Voice coil inductance	Le	0.08 mH
Resonance frequency	fs	850 Hz
Mechanical Q factor	Qms	0.7
Electrical Q factor	Qes	0.9
Total Q factor	Qts	0.4
Mechanical resistance	Rms	- kg/s
Moving mass (incl. air load)	Mms	0.4 g
Suspension compliance	Cms	- mm/N
Effective dome diameter	d	31.3 mm
Effective piston area	Sd	7.7 cm2
Equivalent volume	Vas	- 1
Force factor	Bl	3.3 Tm
Recommended frequency range	2000-30000 Hz	

Magnet and Voice Coil Properties		
Voice coil diameter	dc	28 mm
Voice coil height	hc	2.8 mm
Voice coil layers	nc	2
Magnetic gap height	hg	2.5 mm
Linear excursion, peak to peak		- mm
Max. excursion, peak to peak		- mm
Magnet weight	wm	0.24 kg

Power Handling		
Nominal long term IEC*	130	W
Transient (10 ms)	1000	W

Mechanical Properties		
Net weight	0.64	kg
Overall dimension	ø111x50	mm

* Depending on crossover

MD 130

Frequency response • on-axis, 30° and 60° off-axis

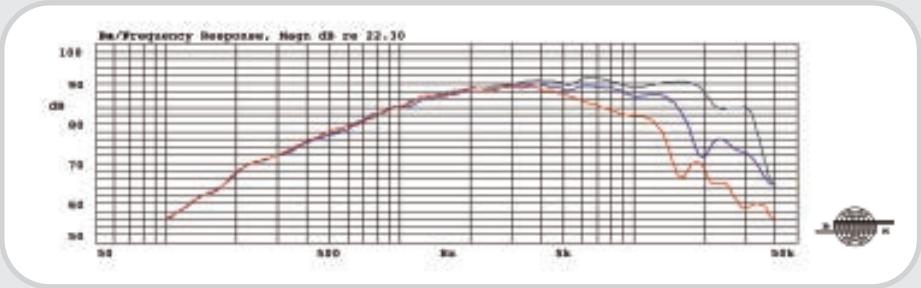

Thick line: on-axis response
Dashed line: 30° horizontal
Thin line: 60° horizontal

Measurement conditions
Level: 2.83 V
Distance: 1 m

Measured in a large baffle

Frequency response • 2nd and 3rd harmonic distortion

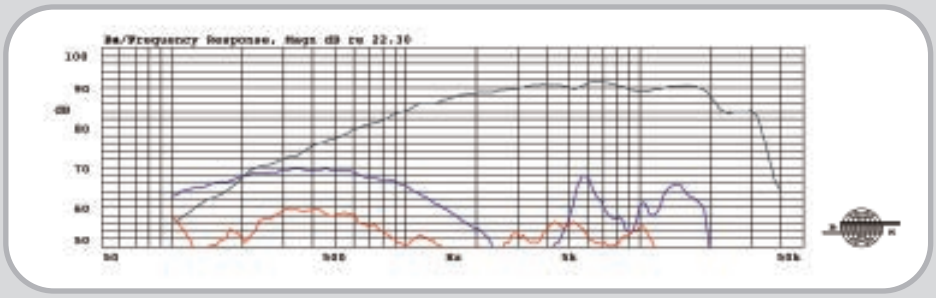

Thick line: on-axis response
Dashed line: 2nd harmonic
Thin line: 3rd harmonic

2nd and 3rd harmonic raised 20 dB

Measurement conditions
Level: 2.83 V
Distance: 1 m

Measured in a large baffle

Impedance • with and without impedance correction circuit

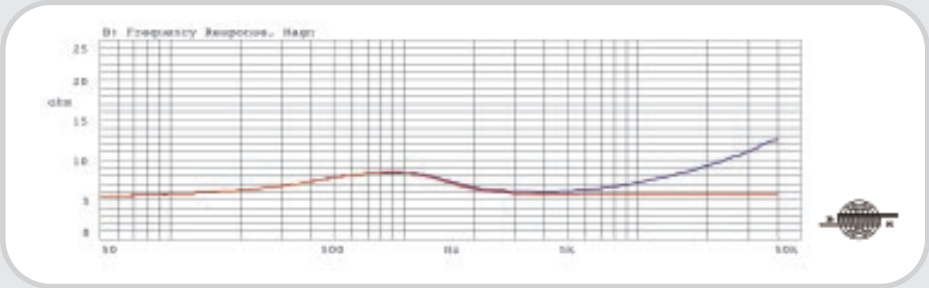

Thick line: impedance, free air
Thin line: impedance, free air with compensation

See drawing below.

Measurement conditions
Level: 0.2 V
Driver in free air

The MD130 has a smooth and wide frequency range extending to beyond 30 kHz. It exhibits excellent dispersion even 60 degrees off-axis, which makes it ideal for use in a car, where the listener in most installations will be off the tweeter-axis.

The distortion is very low and at frequencies below approximately 2 kHz it will be greatly reduced by the crossover.

The extremely linear impedance curve makes the MD130 an ideal and easy load for the amplifier.

As the MD130 has no built-in crossover, always use an external passive or active crossover.

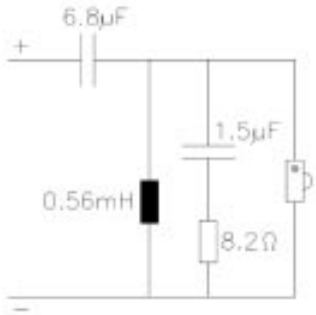

Typical crossover

MD 330 D

The ESOTAR, MD-330 D is a soft dome tweeter based on the state-of-the-art tweeter ESOTAR, T-330, but redesigned for usage in a car and similar environment.

The optimized dome geometry and the low mass ensure unlimited high frequency reproduction reaching beyond 30 kHz.

Aerodynamics and reflexions have been given extreme attention resulting in true high end performance.

- Coated textile dome eliminates any high frequency break-up
- Very large magnet system with vented pole piece
- Open, spacious and detailed high frequency reproduction
- Excellent dynamic and transient performance
- Damped cavity beneath the dome
- Ferrofluid adds damping and increases power handling
- Aluminium voice coil wire results in a low moving mass
- Aluminium front plate
- Protective grille
- No built-in crossover for higher flexibility

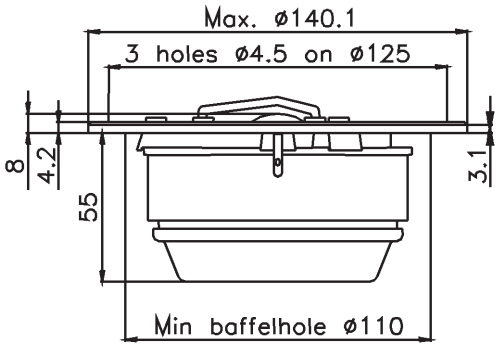

TECHNICAL SPECIFICATIONS

Thiele Small Parameters		
Nominal impedance	Znom	8 Ω
DC resistance	Re	5.2 Ω
Voice coil inductance	Le	0.07 mH
Resonance frequency	fs	750 Hz
Mechanical Q factor	Qms	0.33
Electrical Q factor	Qes	0.5
Total Q factor	Qts	0.2
Mechanical resistance	Rms	kg/s
Moving mass (incl. air load)	Mms	0.45 g
Suspension compliance	Cms	- mm/N
Effective dome diameter	d	31.3 mm
Effective piston area	Sd	7.7 cm2
Equivalent volume	Vas	- l
Force factor	Bl	4.6 Tm
Recommended frequency range	2000-30000 Hz	

Magnet and Voice Coil Properties		
Voice coil diameter	dc	28 mm
Voice coil height	hc	2.8 mm
Voice coil layers	nc	2
Magnetic gap height	hg	2.5 mm
Linear excursion, peak to peak		0.3 mm
Max. excursion, peak to peak		3.2 mm
Magnet weight	wm	0.7 kg

Power Handling		
Nominal long term IEC*	130	W
Transient (10 ms)	1000	W

Mechanical Properties		
Net weight	1.6	kg
Overall dimension	ø140.1x66	mm

* Depending on crossover

MD 330 D

Frequency response • on-axis, 30° and 60° off-axis

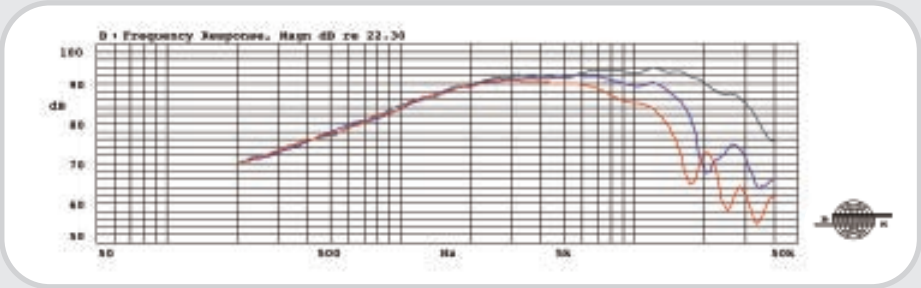

Thick line: on-axis response
Dashed line: 30° horizontal
Thin line: 60° horizontal

Measurement conditions
Level: 2.83 V
Distance: 1 m

Measured in a large baffle

Frequency response • 2nd and 3rd harmonic distortion

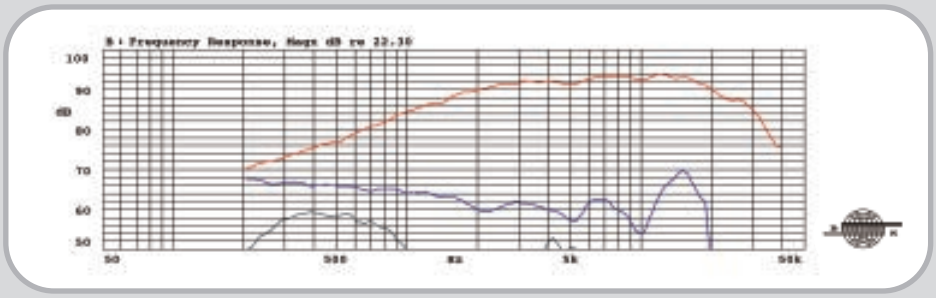

Thick line: on-axis response
Dashed line: 2nd harmonic
Thin line: 3rd harmonic

2nd and 3rd harmonic raised 20 dB

Measurement conditions
Level: 2.83 V
Distance: 1 m

Measured in a large baffle

Impedance • with and without impedance correction circuit

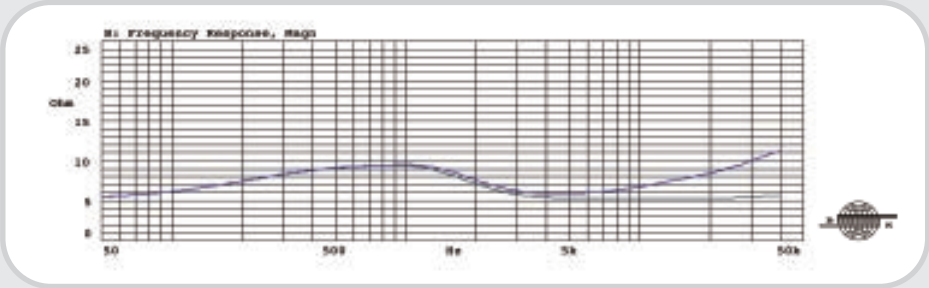

Thick line: impedance, free air
Thin line: impedance, free air with compensation

See drawing below.

Measurement conditions
Level: 0.2 V
Driver in free air

The MD-330 D is characterized by a smooth frequency response and extraordinarily good dispersion to above 20 kHz with a well behaved high frequency roll-off.

The distortion is extremely low and will be further reduced when combined with a crossover. This is a necessity if absolute high-end reproduction is required in the sensitive tweeter frequency area.

The impedance curve is extremely linear, especially when an impedance correction circuit is used. This, in combination with the low resonance frequency, makes crossover design a less complicated task and makes the driver an easy load for the amplifier.

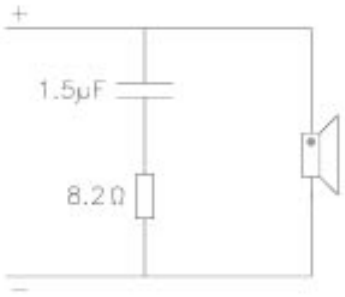

Impedance correction circuit

MD 140/2

The MD140/2 is a compact 75 mm soft dome midrange designed for high performance 3- or 4-way systems.

The driver has a smooth frequency response, thus simplifying crossover design. The MD140/2 is characterized by a midrange reproduction with a high degree of clarity and detail without any aggressiveness.

The driver has both integrated enclosure and grille. Furthermore it has a small outer diameter compared to the size of the dome and a shallow mounting depth making it ideal for mounting in a car.

- Coated textile dome
- Large 75 mm voice coil ensures high power handling and low compression
- Internal magnet structure with vented pole piece
- Aluminium voice coil wire results in a low moving mass
- Shallow mounting depth
- Integrated protective grille
- Ferrofluid adds damping and increases power handling

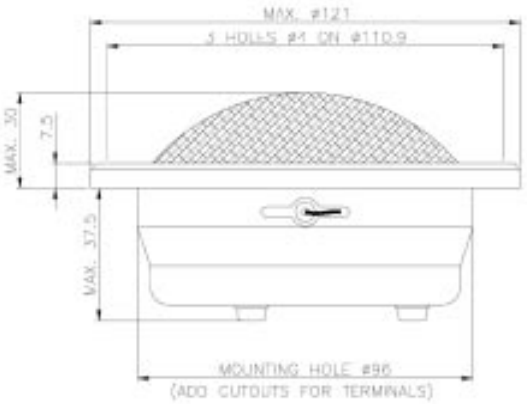

TECHNICAL SPECIFICATIONS

Thiele Small Parameters		
Nominal impedance	Znom	8 Ω
DC resistance	Re	5.1 Ω
Voice coil inductance	Le	0.13 mH
Resonance frequency	fs	480 Hz
Mechanical Q factor	Qms	1.17
Electrical Q factor	Qes	2.43
Total Q factor	Qts	0.79
Mechanical resistance	Rms	12.4 kg/s
Moving mass (incl. air load)	Mms	4.8 g
Suspension compliance	Cms	- mm/N
Effective dome diameter	d	81 mm
Effective piston area	Sd	52 cm2
Equivalent volume	Vas	- 1
Force factor	Bl	5.5 Tm
Recommended frequency range	700-6000	Hz

Magnet and Voice Coil Properties		
Voice coil diameter	dc	75 mm
Voice coil height	hc	5.5 mm
Voice coil layers	nc	2
Magnetic gap height	hg	3 mm
Linear excursion, peak to peak		2.5 mm
Max. excursion, peak to peak		5 mm
Magnet weight	wm	0.24 kg

Power Handling		
Nominal long term IEC*	100	W
Transient (10 ms)	1000	W

Mechanical Properties		
Net weight	0.75	kg
Overall dimension	ø121x66	mm

* Depending on crossover

MD 140/2

Frequency response • on-axis, 30° and 60° off-axis

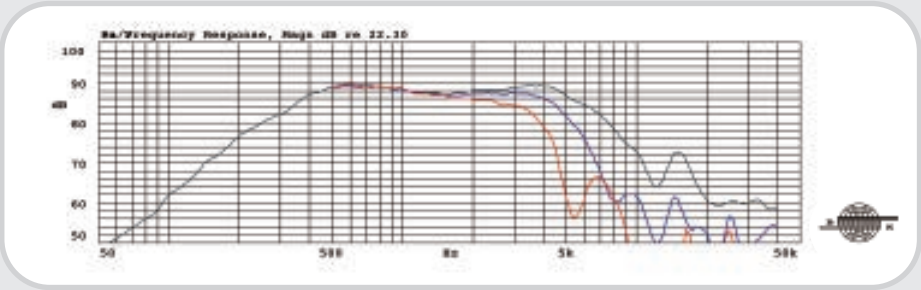

Thick line: on-axis response
Dashed line: 30° horizontal
Thin line: 60° horizontal

Measurement conditions
Level: 2.83 V
Distance: 1 m.

Measured in a large baffle

Frequency response • 2nd and 3rd harmonic distortion

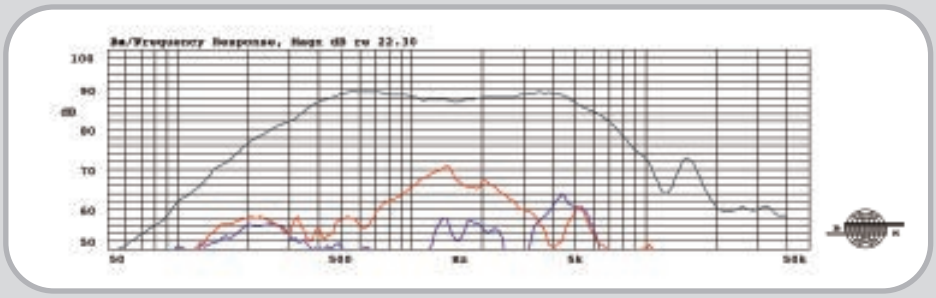

Thick line: on-axis response
Dashed line: 2nd harmonic
Thin line: 3rd harmonic

2nd and 3rd harmonic raised 30 dB

Measurement conditions
Level: 2.83 V
Distance: 1 m

Measured in a large baffle

Impedance • with and without impedance correction circuit

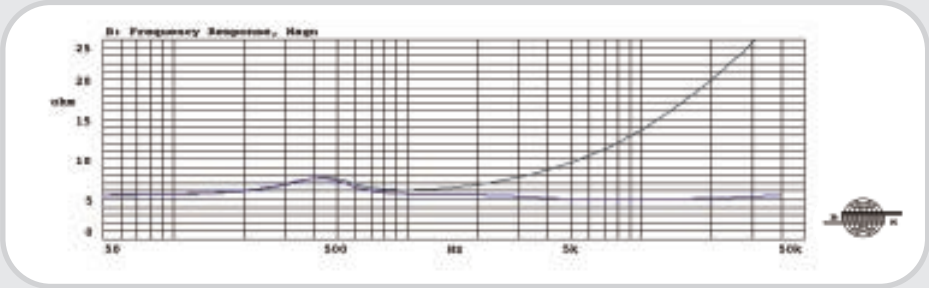

Thick line: impedance, free air
Thin line: impedance, free air with compensation

See drawing below.

Measurement conditions
Level: 0.2 V
Driver in free air

The curves exhibit the MD140/2 as a dedicated midrange driver with an excellent frequency response and an exemplary roll-off below 500 Hz and beyond 5 kHz. Furthermore, the fine dispersion and frequency response make the MD140/2 an ideal choice for high quality 3-way installations. The impedance of the MD140/2 is very linear, making it an easy load for the amplifier while also simplifying crossover design.

The driver can be mounted in a wide range of locations, e.g. in the dashboard, the doors or in the hat shelf. A typical first order crossover is shown on the drawing. Depending on the other drivers used, the output may need to be damped using Rs and Rp in order to make the levels match. Typical values of Rs and Rp are 2.2 W and 15 W respectively. With these values it will match the MD100.

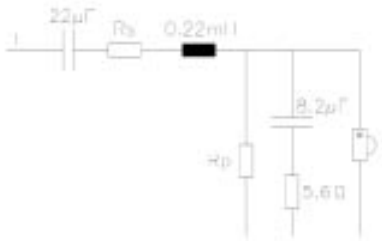

Typical crossover

MW 150

The MW150 is a small woofer suitable for 2-way systems or combined with a subwoofer in a high quality full range installation.

The driver achieves optimum results in sealed enclosures or in free air applications, e.g. mounted in a hat shelf or in a door.

Due to the smooth frequency response, the MW150 is also suitable as a dedicated midrange unit in a high performance 3-way system.

- Diaphragm and dust cap moulded as one piece
- Large 75 mm voice coil ensures high power handling
- Internal double magnet system with vented pole piece
- Aluminium voice coil wire provides for a low moving mass
- Rigid die-cast chassis with aerodynamically shaped ribs
- Materials and parameters are optimized for the harsh environmental conditions in a car
- Smooth high-frequency roll-off

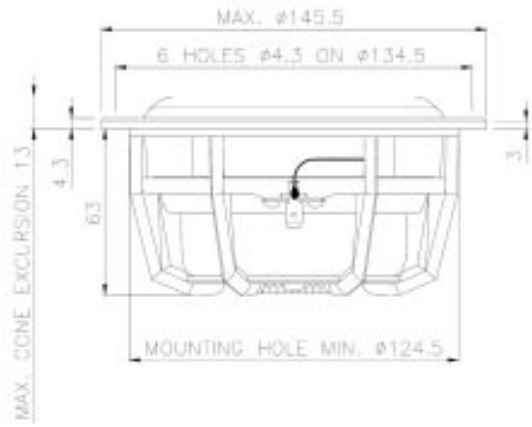

TECHNICAL SPECIFICATIONS

Thiele Small Parameters		
Nominal impedance	Znom	4 Ω
DC resistance	Re	3.0 Ω
Voice coil inductance	Le	0.16 mH
Resonance frequency	fs	70 Hz
Mechanical Q factor	Qms	2.25
Electrical Q factor	Qes	0.68
Total Q factor	Qts	0.52
Mechanical resistance	Rms	2.41 kg/s
Moving mass (incl. air load)	Mms	12.3 g
Suspension compliance	Cms	0.42 mm/N
Effective cone diameter	d	105.0 mm
Effective piston area	Sd	87 cm2
Equivalent volume	Vas	4.5 l
Force factor	Bl	4.9 Tm
Recommended frequency range	55-3500	Hz
Recommended closed box volume	5.7-14.2	l

Magnet and Voice Coil Properties		
Voice coil diameter	dc	75 mm
Voice coil height	hc	10.9 mm
Voice coil layers	nc	2
Magnetic gap height	hg	5 mm
Linear excursion, peak to peak		6 mm
Max. excursion, peak to peak		15 mm
Magnet weight	wm	0.53 kg

Power Handling		
Nominal long term IEC	100	W
Transient (10 ms)	1000	W

Mechanical Properties		
Net weight	1.1	kg
Overall dimension	ø145.5x70	mm

MW 150

Frequency response • on-axis, 30° and 60° off-axis

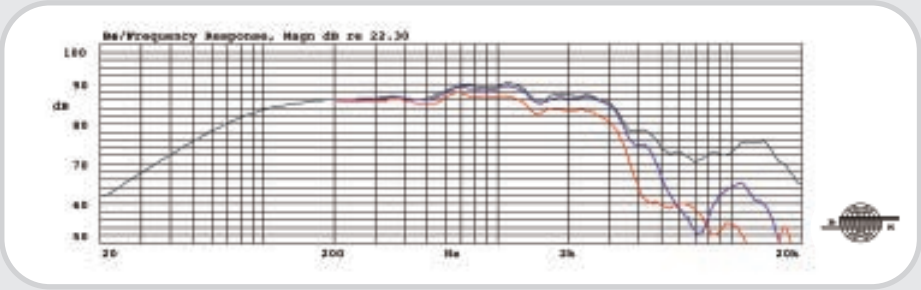

Thick line: on-axis response
Dashed line: 30° horizontal
Thin line: 60° horizontal

Measurement conditions
Level: 2.83 V
Distance: 1 m
Box volume: 8.4 l

Frequency response • 2nd and 3rd harmonic distortion

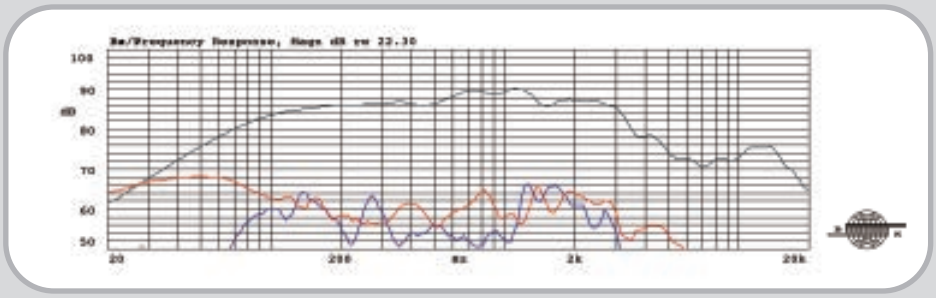

Thick line: on-axis response
Dashed line: 2nd harmonic
Thin line: 3rd harmonic

2nd and 3rd harmonic raised 20 dB

Measurement conditions
Level: 2.83 V
Distance: 1 m
Box volume: 8.4 l

Impedance • with and without impedance correction circuit

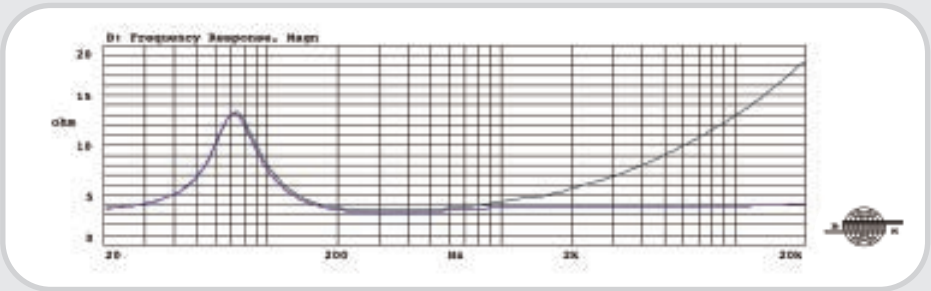

Thick line: impedance, free air
Thin line: impedance, free air with compensation.

See drawing below.

Measurement conditions
Level: 0.2 V
Driver in free air

The frequency response curves show the MW150 as a well behaved driver with a smooth frequency response both on- and off-axis. Furthermore, the distortion is quite low, especially the 3rd harmonic distortion, which is considered to be the most disturbing. These qualities enable the user to build a small high quality system with excellent midrange reproduction.

The impedance curves show that the driver is a simple load for the amplifier. The use of an impedance correction circuit will make it even more simple.

The low suspension compliance makes the driver suitable for small enclosures normally used in cars while also allowing for mounting without a dedicated enclosure, e.g. in the hat shelf or in the door.

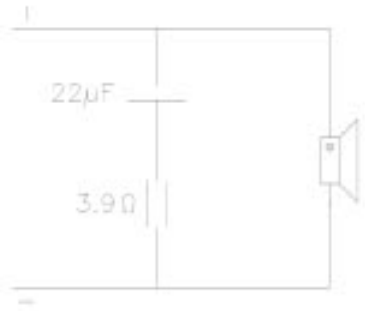

Impedance correction circuit

MW 160

The MW160 is a medium sized woofer designed for 2-way installations or to be combined with a subwoofer in a high quality 3-way system.

Due to the combination of smooth frequency response and good dispersion, this driver makes it possible to design a 2-way installation with a clear and detailed midrange as well as a strong and powerful bass.

- Diaphragm and dust cap moulded as one piece
- Large 75 mm voice coil ensures high power handling
- Internal double magnet system with vented pole piece
- Aluminium voice coil wire provides for a low moving mass
- Rigid die-cast chassis with aerodynamically shaped ribs
- Materials and parameters are optimized for the harsh environmental conditions in a car
- Smooth high-frequency roll-off
- Natural midrange reproduction

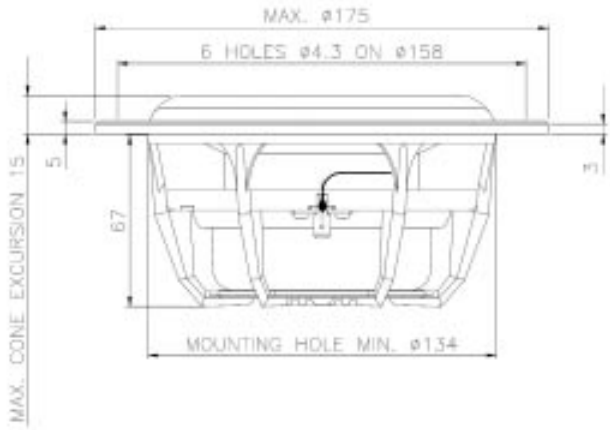

TECHNICAL SPECIFICATIONS

Thiele Small Parameters		
Nominal impedance	Znom	4 Ω
DC resistance	Re	3.0 Ω
Voice coil inductance	Le	0.16 mH
Resonance frequency	fs	55 Hz
Mechanical Q factor	Qms	2.42
Electrical Q factor	Qes	0.65
Total Q factor	Qts	0.51
Mechanical resistance	Rms	2.33 kg/s
Moving mass (incl. air load)	Mms	16.2 g
Suspension compliance	Cms	0.51 mm/N
Effective cone diameter	d	123.6 mm
Effective piston area	Sd	120 cm2
Equivalent volume	Vas	10.4 l
Force factor	Bl	5.1 Tm
Recommended frequency range	40-4000	Hz
Recommended closed box volume	7.1-21.2	l

Magnet and Voice Coil Properties		
Voice coil diameter	dc	75 mm
Voice coil height	hc	10.9 mm
Voice coil layers	nc	2
Magnetic gap height	hg	5 mm
Linear excursion, peak to peak		6 mm
Max. excursion, peak to peak		17 mm
Magnet weight	wm	0.53 kg

Power Handling		
Nominal long term IEC	120	W
	Transient (10 ms)	1000 W

Mechanical Properties		
Net weight	1.2	kg
Overall dimension	ø175x77	mm

MW 160

Frequency response • on-axis, 30° and 60° off-axis

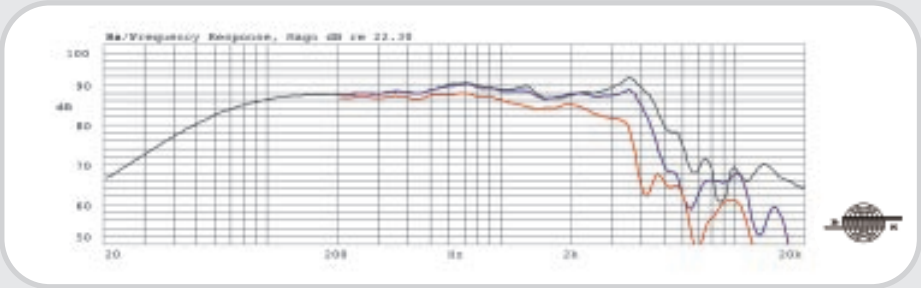

Thick line: on-axis response
Dashed line: 30° horizontal
Thin line: 60° horizontal

Measurement conditions
Level: 2.83 V
Distance: 1 m
Box volume: 15.6 l

Frequency response • 2nd and 3rd harmonic distortion

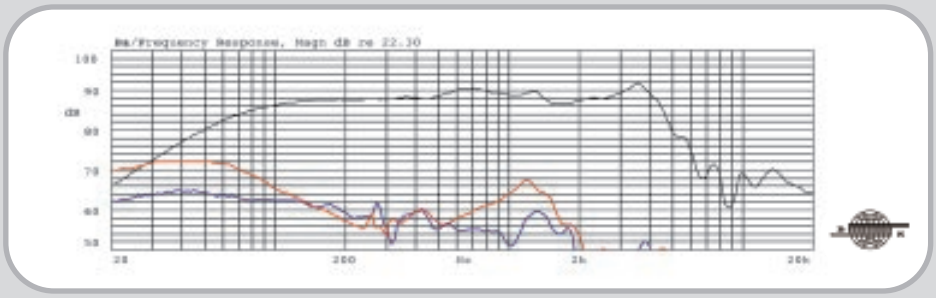

Thick line: on-axis response
Dashed line: 2nd harmonic
Thin line: 3rd harmonic

2nd and 3rd harmonic raised 20 dB

Measurement conditions
Level: 2.83 V
Distance: 1 m
Box volume: 15.6 l

Impedance • with and without impedance correction circuit

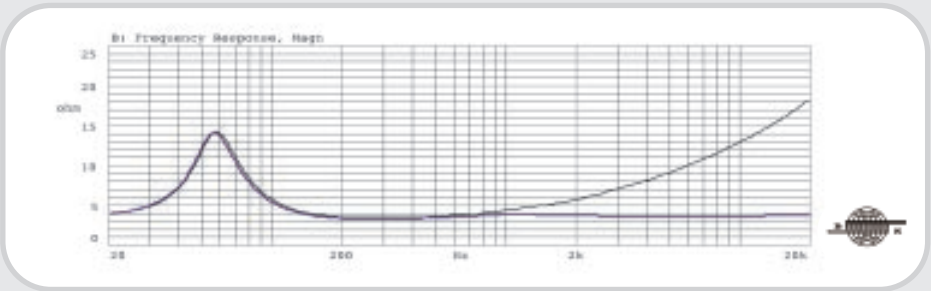

Thick line: impedance, free air
Thin line: impedance, free air with compensation.

See drawing below.

Measurement conditions
Level: 0.2 V
Driver in free air

The driver exhibits a very linear frequency response and a good dispersion up to 3.5 kHz even 60 degrees off-axis. This, combined with the low distortion and the linear impedance, makes it possible to achieve excellent results even with simple crossovers.

The driver is a simple load for the amplifier and the use of an impedance correction circuit will make it even more simple.

The low suspension compliance makes the driver suitable for small enclosures normally used in cars while also allowing for mounting without a dedicated enclosure, e.g. in a hat shelf or in a door.

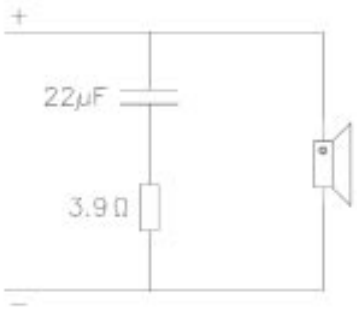

Impedance correction circuit

MW 160 GT

The MW160GT is a medium sized woofer designed for 2-way installations or to be combined with a subwoofer in a high quality 3-way system.

Due to the combination of smooth frequency response and good dispersion, this driver makes it possible to design a 2-way installation with a clear and detailed midrange as well as a strong and powerful bass.

- Diaphragm and dust cap moulded as one piece
- Large 75 mm voice coil ensures high power handling
- Internal double magnet system with vented pole piece
- Aluminium voice coil wire provides for a low moving mass
- Materials and parameters are optimized for the harsh environmental conditions in a car
- Smooth high-frequency roll-off
- Natural midrange reproduction

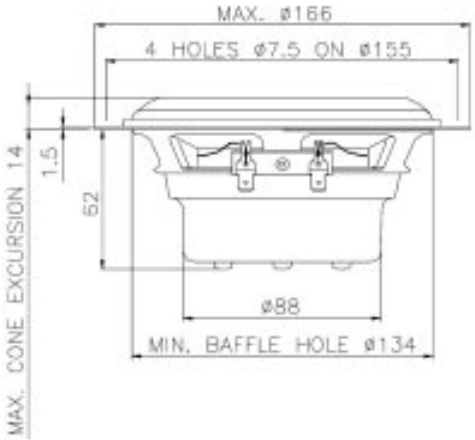

TECHNICAL SPECIFICATIONS

Thiele Small Parameters		
Nominal impedance	Znom	4 Ω
DC resistance	Re	3.0 Ω
Voice coil inductance	Le	0.16 mH
Resonance frequency	fs	60 Hz
Mechanical Q factor	Qms	2.85
Electrical Q factor	Qes	0.80
Total Q factor	Qts	0.62
Mechanical resistance	Rms	1.88 kg/s
Moving mass (incl. air load)	Mms	14.2 g
Suspension compliance	Cms	0.50 mm/N
Effective cone diameter	d	123.6 mm
Effective piston area	Sd	120 cm2
Equivalent volume	Vas	10.1 l
Force factor	Bl	4.5 Tm
Recommended frequency range	40-4000	Hz
Recommended closed box volume	10-30	l

Magnet and Voice Coil Properties		
Voice coil diameter	dc	75
Voice coil height	hc	10.9
Voice coil layers	nc	2
Magnetic gap height	hg	5
Linear excursion, peak to peak		6
Max. excursion, peak to peak		17
Magnet weight	wm	0.45

Power Handling	
Nominal long term IEC	120
Transient (10 ms)	1000

Mechanical Properties	
Net weight	1.1
Overall dimension	ø166x71

MW 160 GT

Frequency response • on-axis, 30° and 60° off-axis

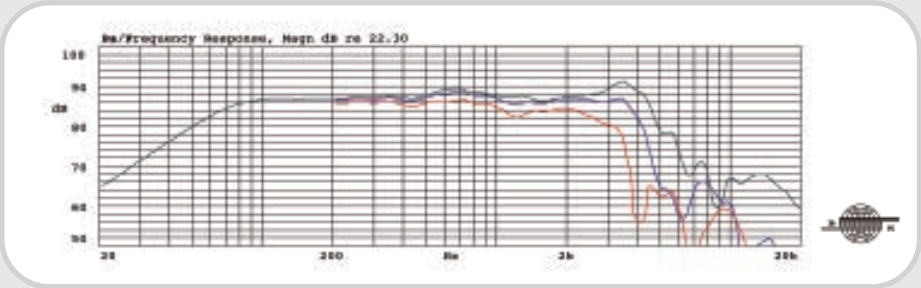

Thick line: on-axis response
Dashed line: 30° horizontal
Thin line: 60° horizontal

Measurement conditions
Level: 2.83 V
Distance: 1 m
Box volume: 15.6 l

Frequency response • 2nd and 3rd harmonic distortion

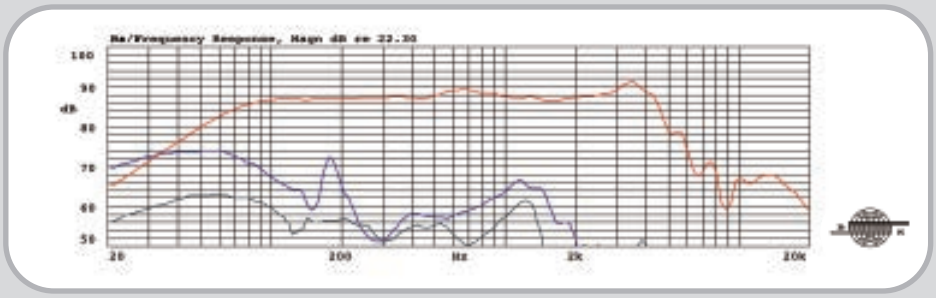

Thick line: on-axis response
Dashed line: 2nd harmonic
Thin line: 3rd harmonic

2nd and 3rd harmonic raised 20 dB

Measurement conditions
Level: 2.83 V
Distance: 1 m
Box volume: 15.6 l

Impedance • with and without impedance correction circuit

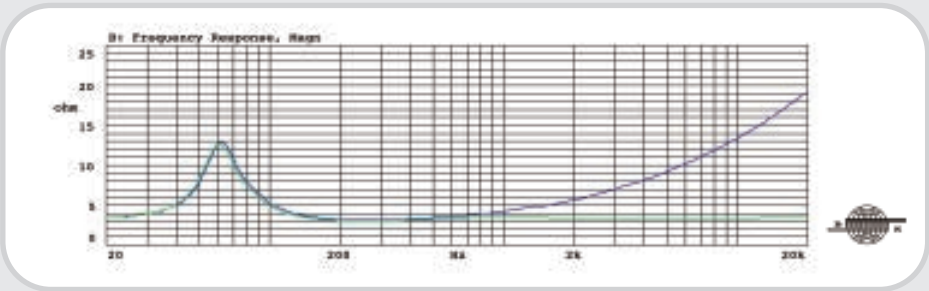

Thick line: impedance, free air
Thin line: impedance, free air with compensation.

See drawing below.

Measurement conditions
Level: 0.2 V
Driver in free air

The driver exhibits a very linear frequency response and a good dispersion up to 3.5 kHz even 60 degrees off-axis. This, combined with the low distortion and the linear impedance, makes it possible to achieve excellent results even with simple crossovers.

The driver is a simple load for the amplifier and the use of an impedance correction circuit will make it even more simple.

The low suspension compliance makes the driver suitable for small enclosures normally used in cars while also allowing for mounting without a dedicated enclosure, e.g. in a hat shelf or in a door.

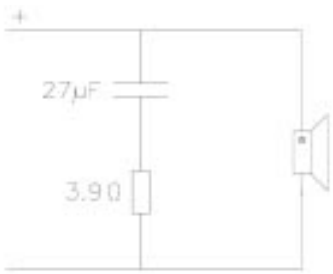

Impedance correction circuit

MW 170

The MW170 is a medium sized woofer suitable for both 2- and 3-way installations.

The driver works well in a wide variety of enclosures, closed as well as vented.

The driver has a unique combination of smooth frequency response, low distortion and powerful bass. This ensures outstanding sonic performance.

- Diaphragm and dust cap moulded as one piece
- Very large 75 mm voice coil ensures high power handling
- Internal double magnet system with vented pole piece
- Aluminium voice coil wire provides for a low moving mass
- Rigid die-cast chassis with aerodynamically shaped ribs
- Materials and parameters are optimized for the harsh environmental conditions in a car
- Natural midrange reproduction
- Smooth high-frequency roll-off

TECHNICAL SPECIFICATIONS

Thiele Small Parameters		
Nominal impedance	Znom	4 Ω
DC resistance	Re	3.1 Ω
Voice coil inductance	Le	0.20 mH
Resonance frequency	fs	41 Hz
Mechanical Q factor	Qms	2.27
Electrical Q factor	Qes	0.67
Total Q factor	Qts	0.52
Mechanical resistance	Rms	2.49 kg/s
Moving mass (incl. airload)	Mms	22.1 g
Suspension compliance	Cms	0.69 mm/N
Effective cone diameter	d	151.5 mm
Effective piston area	Sd	180 cm2
Equivalent volume	Vas	31.8 l
Force factor	Bl	5.1 Tm
Recommended frequency range	35-3500	Hz
Recommended closed box volume	14.2-42.5	l

Magnet and Voice Coil Properties		
Voice coil diameter	dc	75 mm
Voice coil height	hc	14 mm
Voice coil layers	nc	2
Magnetic gap height	hg	5 mm
Linear excursion, peak to peak		9 mm
Max. excursion, peak to peak		15 mm
Magnet weight	wm	0.53 kg

Power Handling		
Nominal long term IEC	150	W
Transient (10 ms)	1000	W

Mechanical Properties		
Net weight	1.3	kg
Overall dimension	ø200x88	mm

MW 170

Frequency response • on-axis, 30° and 60° off-axis

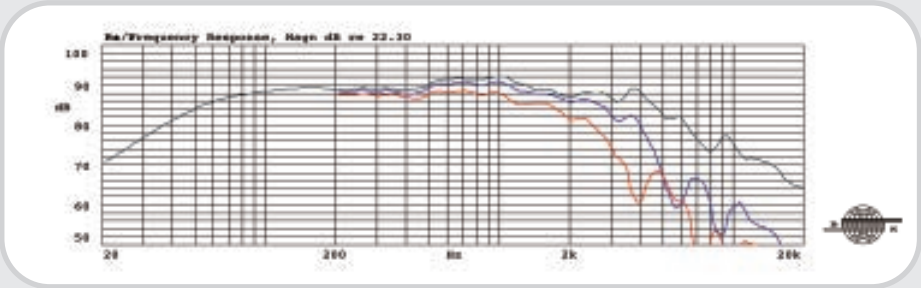

Thick line: on-axis response
Dashed line: 30° horizontal
Thin line: 60° horizontal

Measurement conditions
Level: 2.83 V
Distance: 1 m
Box volume: 18 l

Frequency response • 2nd and 3rd harmonic distortion

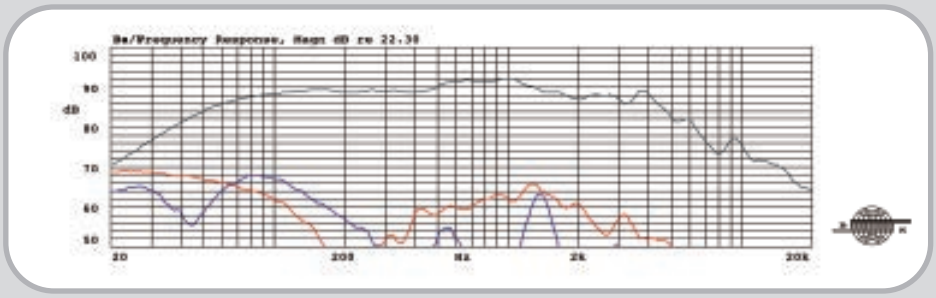

Thick line: on-axis response
Dashed line: 2nd harmonic
Thin line: 3rd harmonic

2nd and 3rd harmonic raised 20 dB

Measurement conditions
Level: 2.83 V
Distance: 1 m
Box volume: 18 l

Impedance • with and without impedance correction circuit

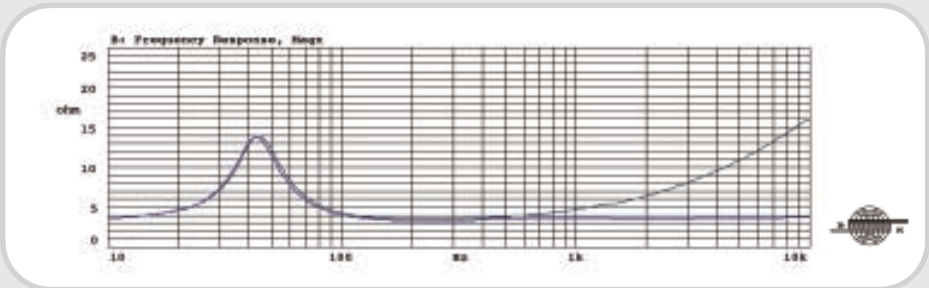

Thick line: impedance, free air
Thin line: impedance, free air with compensation

See drawing below.

Measurement conditions
Level: 0.2 V
Driver in free air

The frequency response curves exhibit the MW170 as a well behaved driver with good dispersion, smooth frequency response and an extraordinary absence of resonance, which makes it possible to create a high quality 2-way system, even with this fairly large woofer.

The impedance curves show that the driver is a simple load for the amplifier. The use of an impedance correction circuit will make it even more simple.

The low suspension compliance makes the driver suitable for small enclosures normally used in cars while also allowing for mounting without an enclosure, e.g. in a hat shelf.

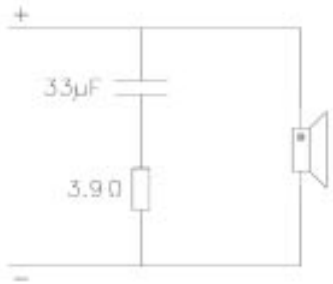

Impedance correction circuit

MW 180

The MW180 is a large powerful driver intended for woofer and subwoofer applications in high quality car audio systems.

The driver is applicable in a wide variety of boxes, closed as well as vented. The unusually large voice coil ensures not only high power handling, but also deep, tight, and detailed bass reproduction without any compression.

- Diaphragm and dust cap moulded as one piece
- Very large 100 mm voice coil ensures high power handling
- Internal magnet structure with vented pole piece
- Long linear excursion
- Aluminium voice coil wire provides for a low moving mass
- Materials and parameters are optimized for the harsh environmental conditions in a car

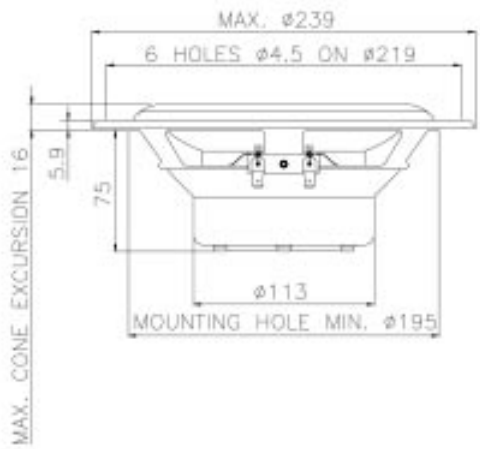

TECHNICAL SPECIFICATIONS

Thiele Small Parameters		
Nominal impedance	Znom	4 Ω
DC resistance	Re	3.8 Ω
Voice coil inductance	Le	0.31 mH
Resonance frequency	fs	33 Hz
Mechanical Q factor	Qms	2.80
Electrical Q factor	Qes	0.62
Total Q factor	Qts	0.51
Mechanical resistance	Rms	2.3 kg/s
Moving mass	Mms	31 g
Suspension compliance	Cms	0.77 mm/N
Effective cone diameter	d	173 mm
Effective piston area	Sd	235 cm2
Equivalent volume	Vas	61 l
Force factor	Bl	6.2 Tm
Recommended frequency range	30-2000	Hz
Recommended closed box volume	21.2-56.6	l

Magnet and Voice Coil Properties		
Voice coil diameter	dc	100 mm
Voice coil height	hc	17 mm
Voice coil layers	nc	2
Magnetic gap height	hg	8 mm
Linear Excursion, peak to peak		9 mm
Max. Excursion, peak to peak		26 mm
Magnet weight	wm	0.7 kg

Power Handling		
Nominal long term IEC	180	W
Transient (10 ms)	1000	W

Mechanical Properties		
Net weight	1.85	kg
Overall dimension	ø239x86	mm

MW 180

Frequency response • on-axis, 30° and 60° off-axis

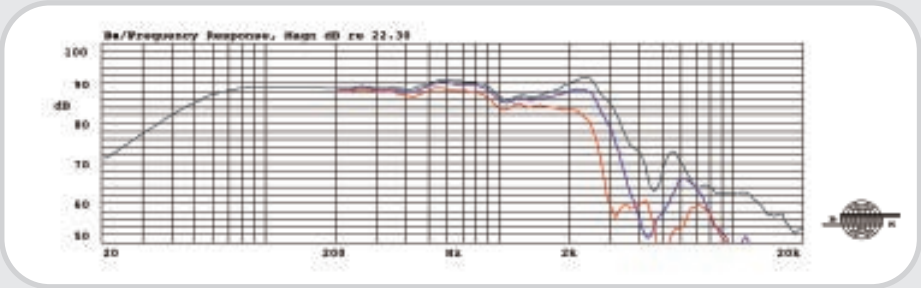

Thick line: on-axis response
Dashed line: 30° horizontal
Thin line: 60° horizontal

Measurement conditions
Level: 2.83 V
Distance: 1 m
Box volume: 25.1 l

Frequency response • 2nd and 3rd harmonic distortion

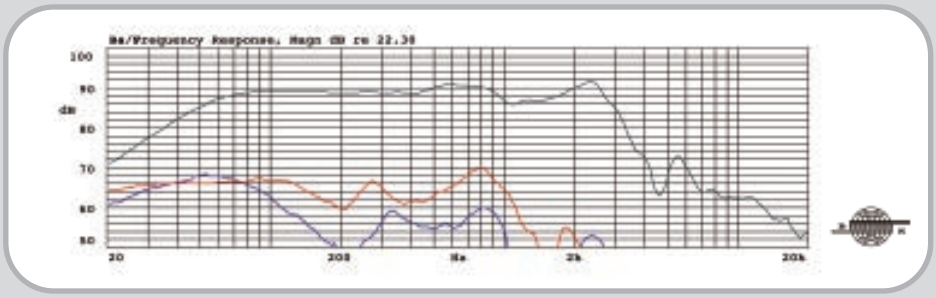

Thick line: on-axis response
Dashed line: 2nd harmonic
Thin line: 3rd harmonic

2nd and 3rd harmonic raised 20 dB

Measurement conditions
Level: 2.83 V
Distance: 1 m
Box volume: 25.1 l

Impedance • with and without impedance correction circuit

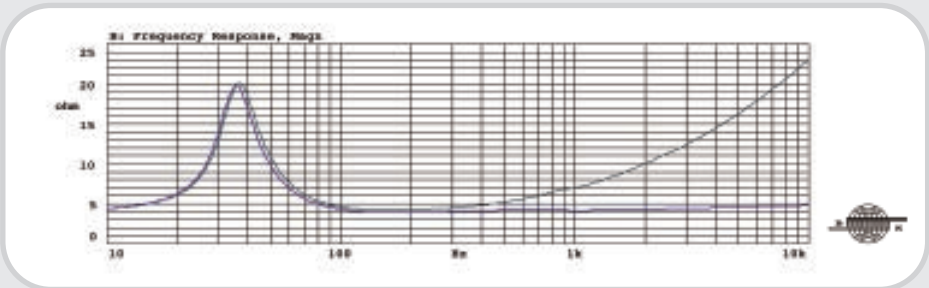

Thick line: impedance, free air
Thin line: impedance, free air with compensation

See drawing below.

Measurement conditions
Level: 0.2 V
Driver in free air

The frequency response curves show the MW180 as a well behaved driver with a smooth high frequency response and extended low frequency range. In spite of the fact that the driver is intended for low frequency applications, the dispersion is good up to 2 kHz, which simplifies crossover design, be it passive or active.

The impedance curves show that the driver is a simple load for the amplifier. The use of an impedance correction circuit will make it even more simple.

The low suspension compliance makes the driver suitable for small enclosures normally used in cars while also allowing for mounting without an enclosure, e.g. in a hat shelf.

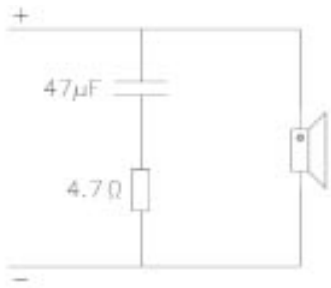

Impedance correction circuit

MW 190

The MW190 is a large powerful driver intended for woofer and subwoofer applications in high quality car audio systems.

The driver is applicable in a wide variety of boxes, closed as well as vented.

The unusually large voice coil ensures not only high power handling, but deep, tight, and detailed bass reproduction without any compression.

- Diaphragm and dust cap moulded as one piece
- Very large 100 mm voice coil ensures high power handling
- Internal double magnet structure with vented pole piece
- Long linear excursion
- Aluminium voice coil wire provides for low moving mass
- Rigid die-cast chassis with aerodynamically shaped ribs
- Materials and parameters are optimized for the harsh environmental conditions in a car

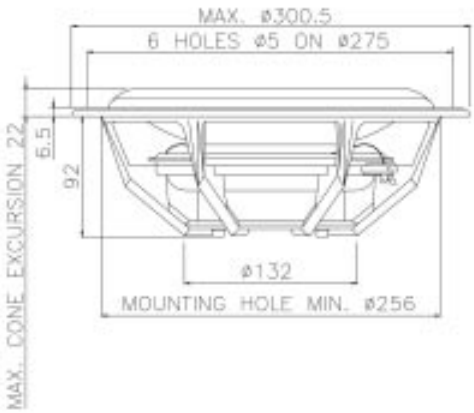

TECHNICAL SPECIFICATIONS

Thiele Small Parameters		
Nominal impedance	Znom	4 Ω
DC resistance	Re	3.8 Ω
Voice coil inductance	Le	0.29 mH
Resonance frequency	fs	31 Hz
Mechanical Q factor	Qms	2.97
Electrical Q factor	Qes	0.64
Total Q factor	Qts	0.53
Mechanical resistance	Rms	2.70 kg/s
Moving mass	Mms	40.6 g
Suspension compliance	Cms	0.63 mm/N
Effective cone diameter	d	225.6 mm
Effective piston area	Sd	400 cm2
Equivalent volume	Vas	143.4 l
Force factor	Bl	6.8 Tm
Recommended frequency range	20-800	Hz
Recommended closed box volume	56.5-113	l

Magnet and Voice Coil Properties		
Voice coil diameter	dc	100 mm
Voice coil height	hc	17 mm
Voice coil layers	nc	2
Magnetic gap height	hg	8 mm
Linear excursion, peak to peak		9 mm
Max. excursion, peak to peak		28 mm
Magnet weight	wm	0.94 kg

Power Handling		
Nominal long term IEC	190	W
Transient (10 ms)	1000	W

Mechanical Properties		
Net weight	2.3	kg
Overall dimension	ø300.5x102	mm

MW 190

Frequency response • on-axis, 30° and 60° off-axis

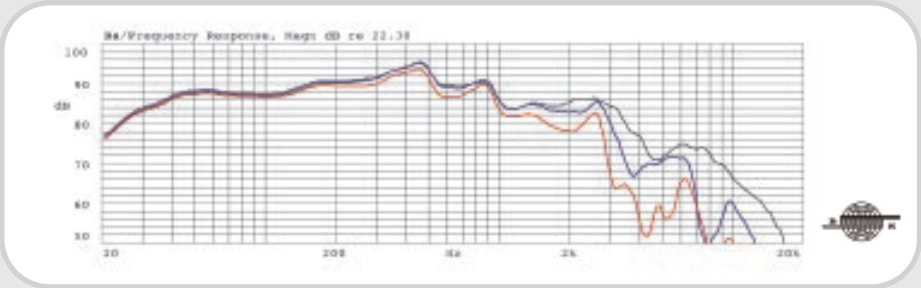

Thick line: on-axis response
Dashed line: 30° horizontal
Thin line: 60° horizontal

Measurement conditions
Level: 2.83 V
Distance: 1 m
Box volume: 67.6 l

Frequency response • 2nd and 3rd harmonic distortion

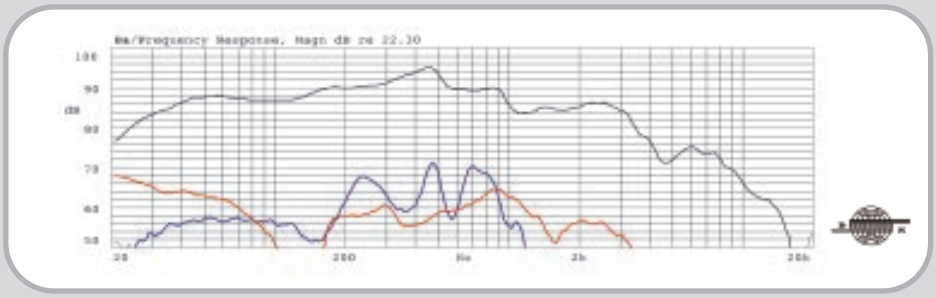

Thick line: on-axis response
Dashed line: 2nd harmonic
Thin line: 3rd harmonic

2nd and 3rd harmonic raised 20 dB

Measurement conditions
Level: 2.83 V
Distance: 1 m
Box volume: 67.6 l

Impedance • with and without impedance correction circuit

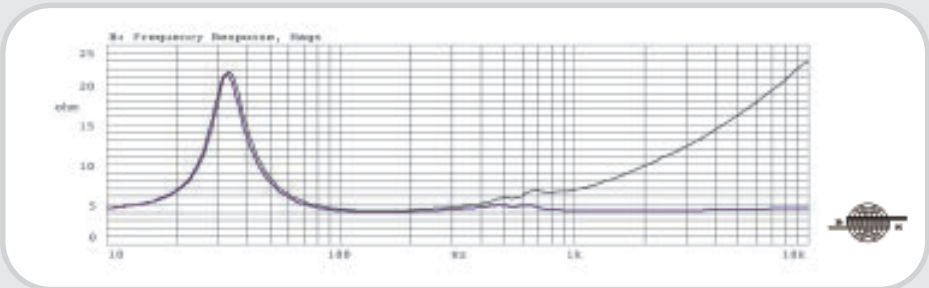

Thick line: impedance, free air
Thin line: impedance, free air with compensation.

See drawing below.

Measurement conditions
Level: 0.2 V
Driver in free air

The frequency response curves exhibit the MW190 as a dedicated woofer. Although the driver is intended for low frequency applications, it has a fairly smooth frequency response and good dispersion. This makes it easy to integrate the MW190 in a full range installation with either passive or active filtering.

The impedance curves show that the driver is a simple load for the amplifier. The use of an impedance correction circuit will make it even more simple.

The low suspension compliance makes the driver suitable for small enclosures normally used in cars while also allowing for mounting without an enclosure, e.g. in a hat shelf.

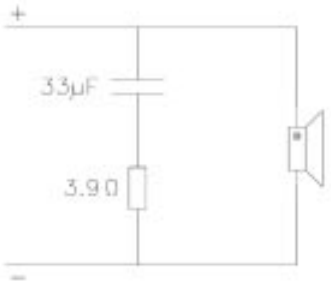

Impedance correction circuit

X 250

The X 250 is designed to accommodate 3 different woofers: MW 150, MW 160/MW 160 GT, and MW 170 in combination with our MD 100 neodymium tweeter.
No matter which woofer is used the sound is characterized by a linear frequency response and a good dispersion ensuring outstanding sonic performance in a wide range of cars.

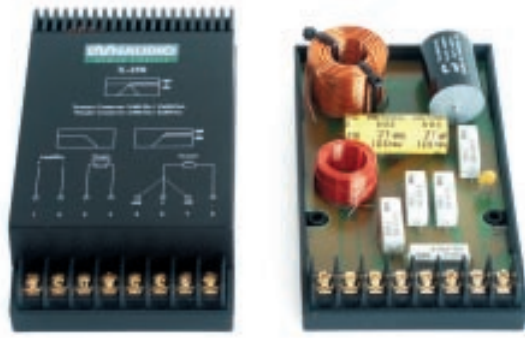

- First order crossover with impedance correction for the woofer
- Second order crossover with built-in self resetting protection circuit for the tweeter
- 3-position tweeter level control to adjust sound according to tweeter position and to personal preference
- Very high quality components including polypropylene capacitor for the tweeter and gold plated screw terminals
- PCB mounted with vibration absorbers to avoid rattling noises

TECHNICAL

	MW 150	MW 160/GT	MW 170
Crossover frequency	2800 Hz	2800 Hz	2800 Hz
Nominal impedance	4 Ω	4 Ω	4 Ω
Power handling	100 W	120 W	150 W
Dimensions	38x84x145 mm		
Net weight	0.33 kg		

X 280

The X 280 is designed to accommodate three different woofers; MW 150, MW 160/MW 160 GT, and MW 170 in combination with our mobile tweeter MD 130/MD 330 D.

No matter which woofer is used the sound is characterized by a linear frequency response and a good dispersion ensuring outstanding sonic performance in a wide range of cars.

	MW 150	MW 160/GT	MW 170
Crossover frequency	2300 Hz	2300 Hz	2300 Hz
Nominal impedance	4 Ω	4 Ω	4 Ω
Power handling	100 W	120 W	150 W
Dimensions	38x84x145 mm		
Net weight	0.35 kg		

- First order crossover with impedance correction for the woofer
- Second order crossover with built-in self resetting protection circuit for the tweeter
- 3-position tweeter level control to adjust sound according to tweeter position and to personal preference
- Very high quality components including polypropylene capacitor for the tweeter and gold plated screw terminals
- PCB mounted with vibration absorbers to avoid rattling noises

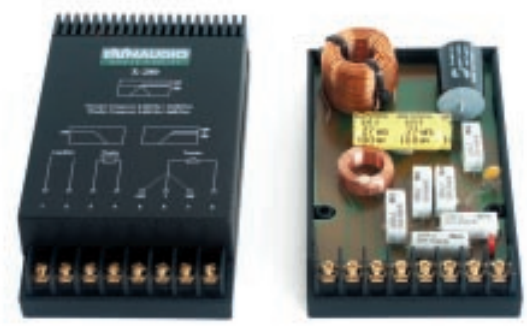

X 360

The X 360 is designed to accommodate 3 different woofers: MW 160, MW 170, and MW 180 in combination with our MD 140/2 soft dome midrange and our MD 100 neodymium tweeter. No matter which combination of drivers is used the sound is characterized by a linear frequency response, very detailed midrange reproduction and a good dispersion ensuring outstanding sonic performance in a wide range of cars.

- First order crossover with impedance correction for the woofer
- First order crossover for the midrange
- Second order crossover with built-in self resetting protection circuit for the tweeter
- 3-position level control for the tweeter and the midrange to adjust the sound according to driver position and personal preference
- Very high quality components including polypropylene capacitor for the tweeter and the midrange and gold plated screw terminals
- PCB mounted with vibration absorbers to avoid rattling noises

SPECIFICATIONS

	MW 160/GT	MW 170	MW 180
Crossover frequencies	700 Hz/4 kHz	700 Hz/4 kHz	700 Hz/4 kHz
Nominal impedance	4 Ω	4 Ω	4 Ω
Power handling	200 W	200 W	200 W
Dimensions		43x104x175	mm
Net weight		0.60	kg

X 360 A

	MW 160/GT	MW 170	MW 180
Crossover frequencies	4 kHz	4kHz	4kHz
Nominal impedance	4 Ω	4 Ω	4 Ω
Power handling	200 W	200 W	200 W
Dimensions		43x104x175	mm
Net weight		0.60	kg

The X 360 A is designed to achieve optimum results with two drivers. MD 100 tweeter and the MD 140/2 midrange can be continued with one of the five woofer MW 150 / 160 / 160 GT / 170 / 180.
The input signal to the X 360 A filter can come from either a passive 2way crossover or an amplifier with high pass (HP) output. Input frequency 700 - 20000 Hz.

- First order crossover for the midrange
- Second order crossover with built-in self resetting protection circuit for the tweeter
- 3-position level control for the tweeter and the midrange to adjust the sound according to driver position and personal preference
- Very high quality components including polypropylene capacitor for the tweeter and the midrange and gold plated screw terminals
- PCB mounted with vibration absorbers to avoid rattling noises

system 220 mkII

Two-way; set includes MW 150 5 3/4" MSP one-piece woofer with 3" Magnum aluminum voice coil, long-throw motor and vented, center dual-magnet structure, and MD 100 1.1" soft dome tweeter with 1.1" Magnaflux cooled aluminum voice coil and neodymium dual-magnet motor. Includes all hardware, grilles, crossovers and accessories. Audiophile quality crossover (X 250) is adjustable for three different tweeter operational modes. Phase correct, shallow slope crossover. Die-cast basket. Frequency response: 65 Hz - 25 kHz; 90 dB sens. 100 watts continuous.

Two-way; set includes MW 160 7" MSP one-piece woofer with 3" Magnum aluminum voice coil, long-throw motor and vented, center dual-magnet structure, and MD 100 1.1" soft dome tweeter with 1.1" Magnaflux cooled aluminum voice coil and neodymium dual-magnet motor. Includes all hardware, grilles, crossovers and accessories. Audiophile quality crossover (X 250) is adjustable for three different tweeter operational modes. Phase correct, shallow slope crossover. Die-cast basket. Frequency response: 55 Hz - 25 kHz; 90 dB sens. 100 watts continuous.

system 240 mkII

system 240 GT

Two-way; set includes MW 160 GT 7" MSP one-piece woofer with 3" Magnum aluminum voice coil, long-throw motor and vented, center dual-magnet structure, and MD 100 1.1" soft dome tweeter with 1.1" Magnaflux cooled aluminum voice coil and neodymium dual-magnet motor. Includes all hardware, grilles, crossovers and accessories. Audiophile quality crossover (X 250) is adjustable for three different tweeter operational modes. Phase correct, shallow slope crossover. Stamped steel basket. Frequency response: 55 Hz - 25 kHz; 90 dB sens. 100 watts continuous.

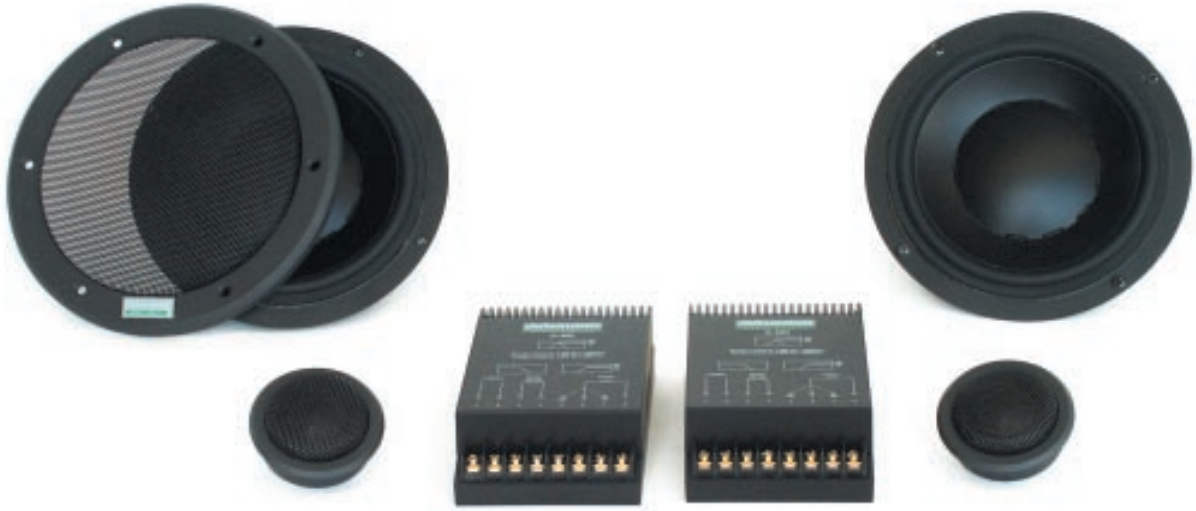

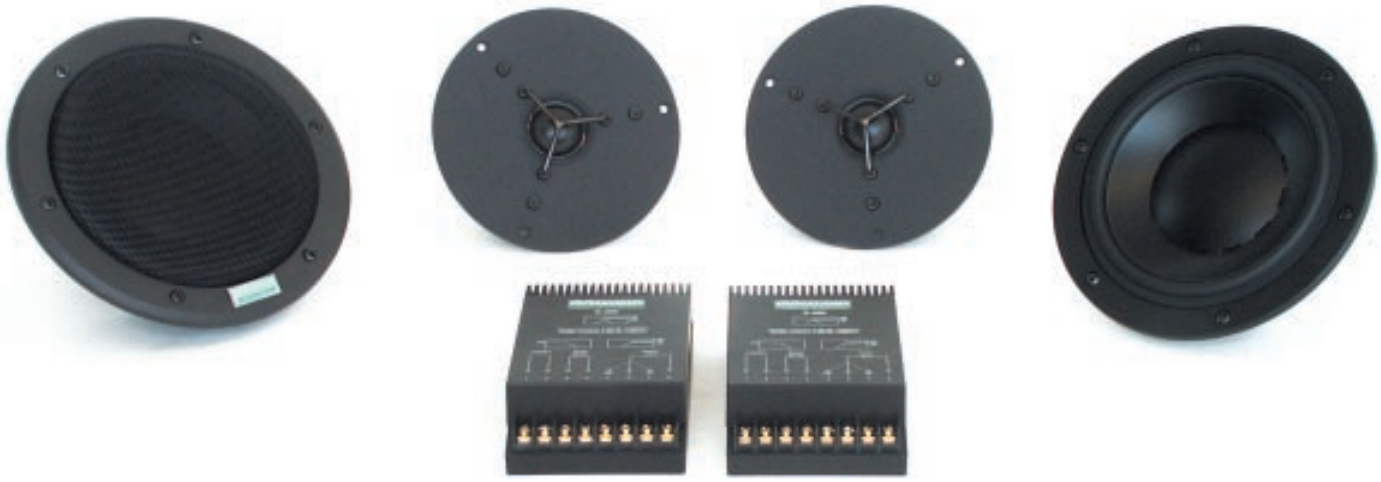

Two-way; set includes MW 160 7" MSP one-piece woofer with 3" Magnum aluminum voice coil, long-throw motor and vented, center dual-magnet structure, and MD-330 D 1.1" soft dome tweeter (the Dynaudio world famous Esotar tweeter for car hifi use) with 1.1" Magnaflux cooled aluminum voice coil and neodymium dual-magnet motor. Includes all hardware, grilles, crossovers and accessories. Audiophile quality crossover (X 280) is adjustable for three different tweeter operational modes. Phase correct, shallow slope crossover. Die-cast basket. Frequency response: 55 Hz - 30 kHz; 90 dB sens. 120 watts continuous.

system 240 ESOTAR

system 340

Three-way; set includes MW 160 7" MSP one-piece cone woofer with 3" aluminum voice coil, MD 140 3" soft dome midrange with 3" aluminum voice coil, sealed and acoustically damped rear chamber, and MD 100 1.1" neodymium dual-magnet soft dome tweeter, plus all hardware, grilles, crossover and accessories. Audiophile quality crossover (X 360) is adjustable for three different tweeter operational modes. Phase correct, shallow slope crossover. Die-cast basket. Frequency response: 55 Hz - 25 kHz; 91 dB sens. 200 watts continous.

Three-way; set includes MW 170 8" MSP one-piece cone woofer with 3" aluminum voice coil, MD 140 3" soft dome midrange with 3" aluminum voice coil, sealed and acoustically damped rear chamber, and MD 100 1.1" neodymium dual-magnet soft dome tweeter, plus all hardware, grilles, crossover and accessories.Audiophile quality crossover (X 360) is adjustable for three different tweeter operational modes. Phase correct, shallow slope crossover. Die-cast basket. Frequency response: 40 Hz - 25 kHz; 92 dB sens. 200 watts continous.

system 360

grilles

All grilles for MW 150 / 160 / 170 / 180 are available seperatly including the mounting ring, excluding the corresponding screws.

SALES

DYNAUDIO Vertriebs GmbH
Ohepark 2
D-21224 Rosengarten-Nenndorf

Tel.: +49 4108 – 4180 - 0
Fax: +49 4108 – 4180 - 10

E-Mail: sales@dynaudio.de
Internet: www.dynaudio.com

PRODUCTION

DYNAUDIO A/S
Sverigesvej 15
DK-8660 Skanderborg

Tel.: +45 86 52 34 11
Fax: +45 86 52 31 16

contacts

Mobile Fidelity_Specifications

Mobile Fidelity_Specifications

SALES

DYNAUDIO Vertriebs GmbH
Ohepark 2
D-21224 Rosengarten-Nenndorf

Tel.: +49 4108 – 4180 - 0
Fax: +49 4108 – 4180 - 10

E-Mail: sales@dynaudio.de
Internet: www.dynaudio.com

PRODUCTION

DYNAUDIO A/S
Sverigesvej 15
DK-8660 Skanderborg

Tel.: +45 86 52 34 11
Fax: +45 86 52 31 16